**Machine Name : Machining Center**

**Brand : DMG**

**Machine Model : LASERTEC 45 SAUER**

**Stock No. : 813742**

**Ex-factory Date : 2017**




**Main Technical Parameters:**

Three-Axis Travel: 700 × 420 × 485 mm
Repeatability: 0.005 mm
Laser Brand: IPG
Laser Output Power: 100 W
Probe Brand: Renishaw
Camera System: Equipped
Machining Technology: 3D Laser Ablation
Main Application: Surface Texture and Pattern Machining
Machining Capability: 5-Axis Texture Machining






PamtonSchnell




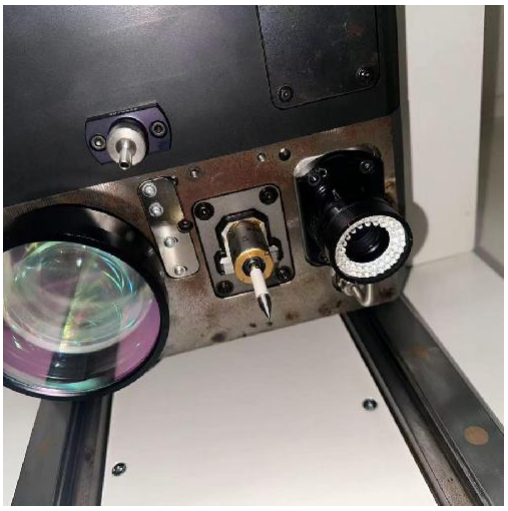



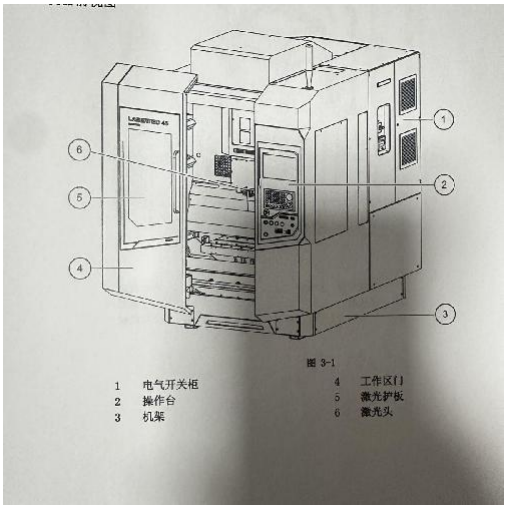





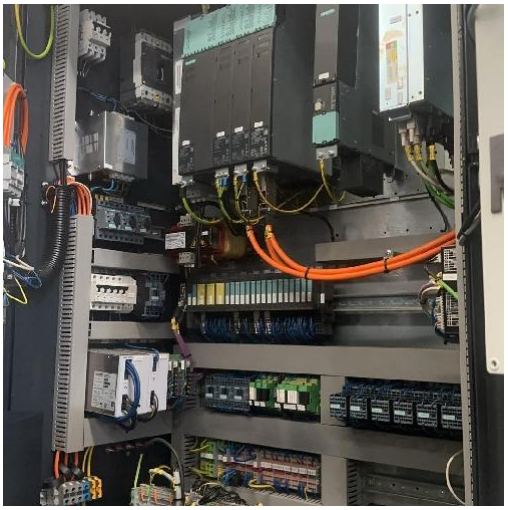

PamtonSchnell

